PVC BLOW THROUGH VALVE
(ABS-PVC050)

When pipe is installed in a manufacturing environment, dust and debris can build up in the pip run which reduces the airflow and effectiveness of the detector.

The blow through valve is used to aid in the cleaning process. Compressed air is directed through the quick release valve which then blows the system through removing any dirt or debris from the system.

Installation Instructions:

Use an ABS Pipe cement. Do not paint. Keep pipe clean and free from dust. Do not install in direct sunlight. Only install with approved pipe. Do not use solvents to clean, only soapy water.
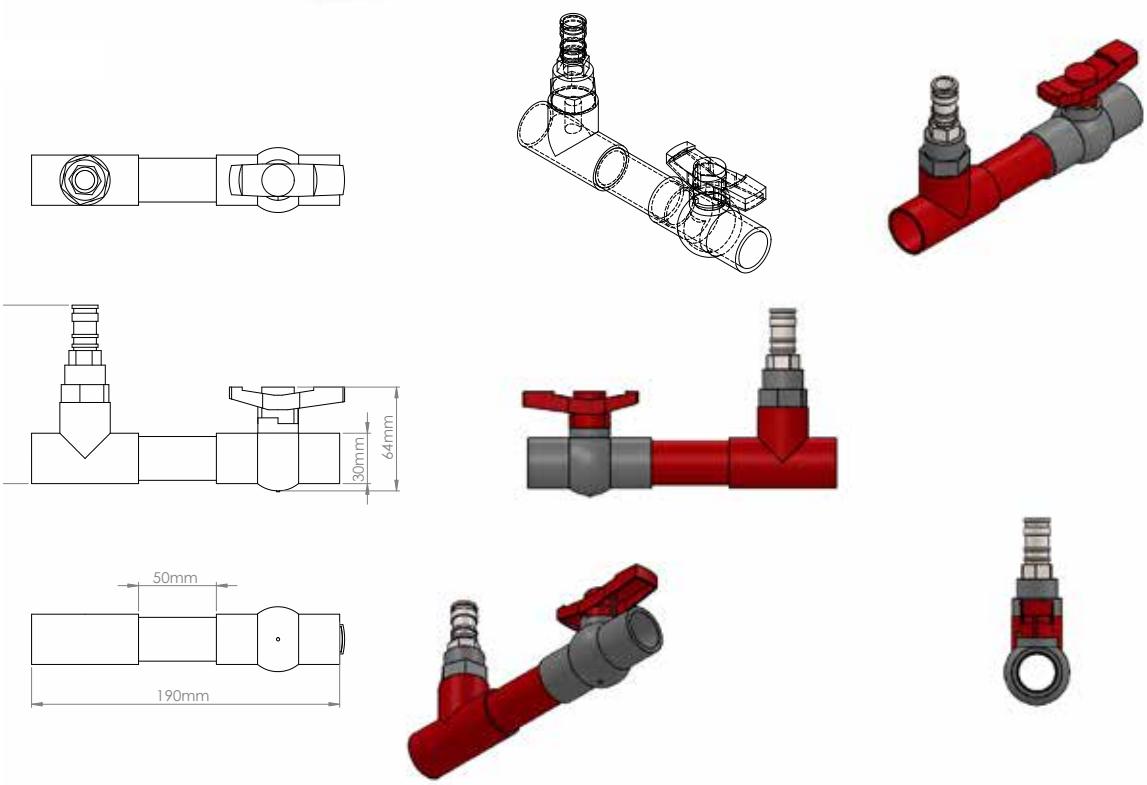
PART NO.:	PIPE COLOUR:	BODY COLOUR:	DIAMETER TOLERANCE:
ABS-PVC050	Red	Dark Grey	+ / - 0.15mm'